Computer Systems
Lecture 21

Overview

- Hard disk drives
- Tracks, sectors and cylinders
- Disk addressing
- Hard disk vs. main memory
- Files, records, fields, keys
- Virtual memory

Hard Disk Drives (HDD)

- Hard disk drives are the most important type of permanent storage used in computers (esp. PCs).
- Hard disks differs from the other mass storage devices in three ways:
  - Size (usually larger).
  - Speed (usually faster).
  - Permanence (usually fixed in computer and not removable).

Schematic diagram of hard disk

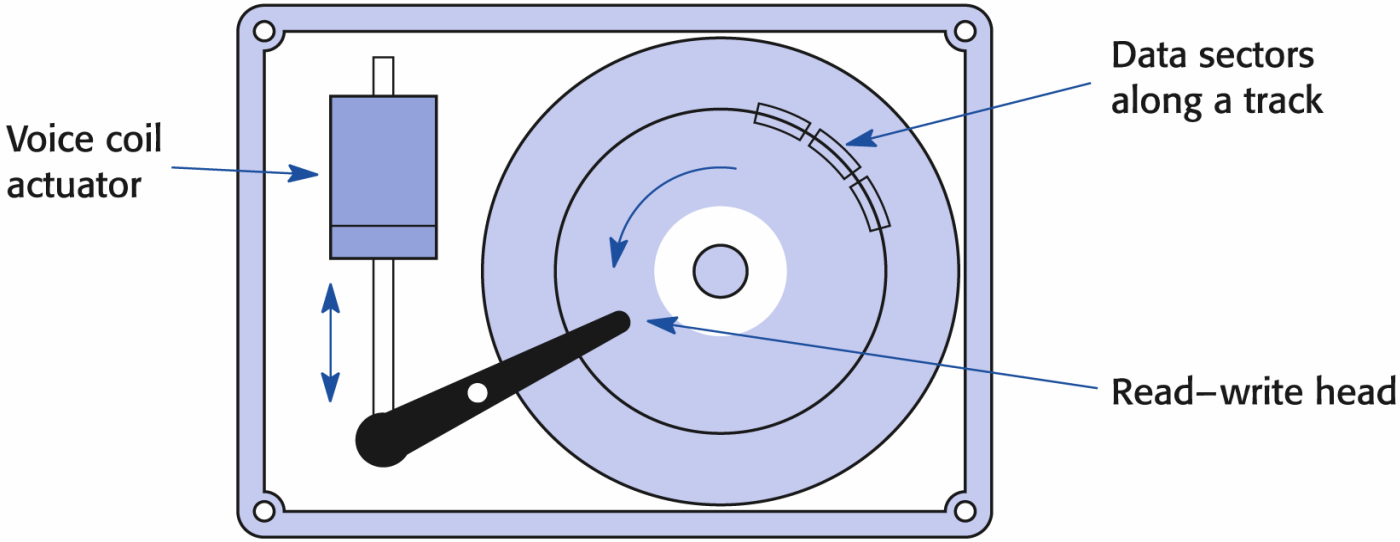

Fig. 12.18 Schematic diagram of hard disk unit.

© Pearson Education 2001

Tracks, sectors and cylinders

- Each disk platter has its information recorded on both **surfaces.**
- Each platter has two **heads**.
- The information is recorded in concentric circles called **tracks**.
- Each track is broken down into smaller pieces called **sectors**, each of which holds 512 bytes of information.

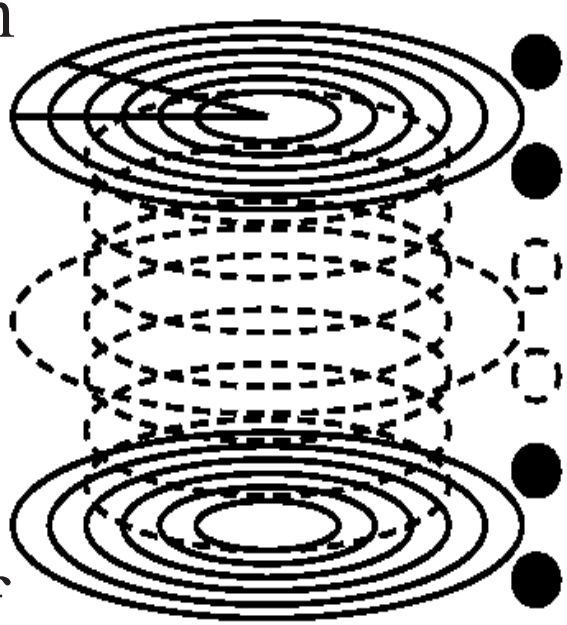

Disk cylinders, tracks, sectors

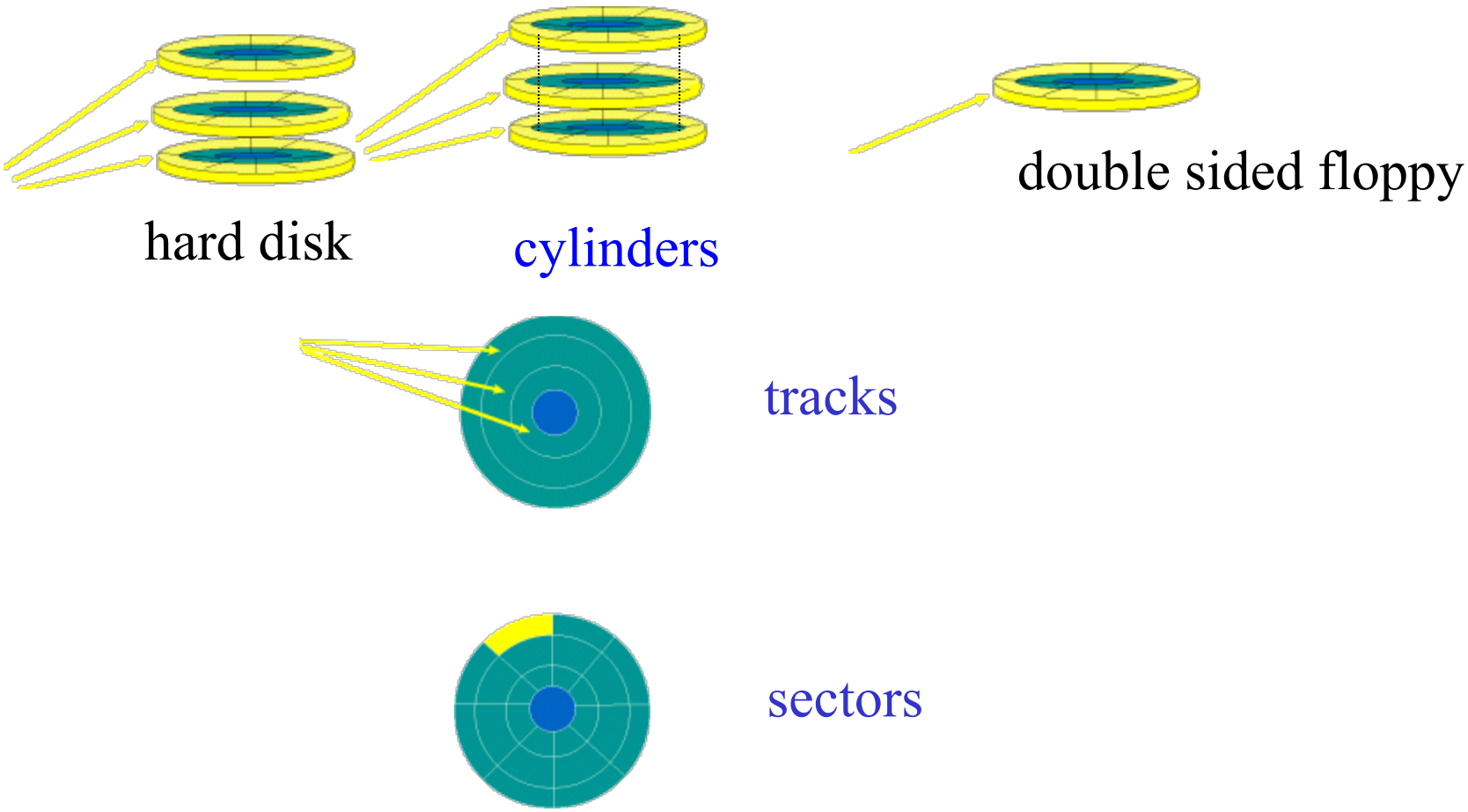

Addressing

- **CHS**.
  - **C**ylinder, **H**ead, **S**ector system.
  - Telling the disk controller which cylinder, head and sector to access.
  - Can be mapped onto LBA.
- **LBA**.
  - **L**arge **B**lock **A**ddressing, by absolute number of a sector.

How does it work?

- **Example (simplified)**:

A piece of information needs to be read.

1. The first step is to figure out where on the disk to look for the needed information.
2. The location on the disk → address expressed either:
   - In terms of the **cylinder, head and sector** (CHS).
   - Or, in terms of the **absolute sector number** (LBA).
3. A request is sent to the drive over the **disk drive interface** giving it this address and asking for the sector to be read.

Progress for the last 25 years

- First PC hard disks: capacity 10 MB and cost about 100 pounds (RMB$1100) per 1 MB.
- Now: capacity > 300 GB and cost < half penny for 1 MB.

Hard disk vs. main memory

- It is larger.
- It is slower.
- It is cheaper (per 1MB).

Disk cache

- A portion of main memory used as a **buffer** to temporarily hold data for the disk.
- Disks write operations are ***clustered***. (Why?)
- Some data written out may be needed again.
  - The data are retrieved rapidly from the disk cache instead of slowly from disk.
- Java "`flush()`" in `java.io.PrintWriter`.

Storage Technology

- Retrieving files into RAM is called *reading*
  - loading an application
  - opening a file
  - files can be programs or documents

Storage Technology (continued)

- Copying data from RAM onto a secondary storage device is called *writing*

Files, records, fields, keys

- Files: e.g. PERSONNEL FILE

- Records: Adam's personal data
- Adam Smith 35 Manager Purchasing

- Fields: e.g. name, age, position, job function
- Key: e.g. Adam Smith

Virtual memory

- Virtual memory is a technique, in a sense, opposite to caching:
  - It is the use of low-level memory (i.e. hard disk) to 'expand' high-level (main) memory.
  - It provides a convenient expansion of main memory by 'overflowing' data and program code onto magnetic disk.
- The area **on disk** reserved for this purpose is known as the **swap area**.

Virtual Memory

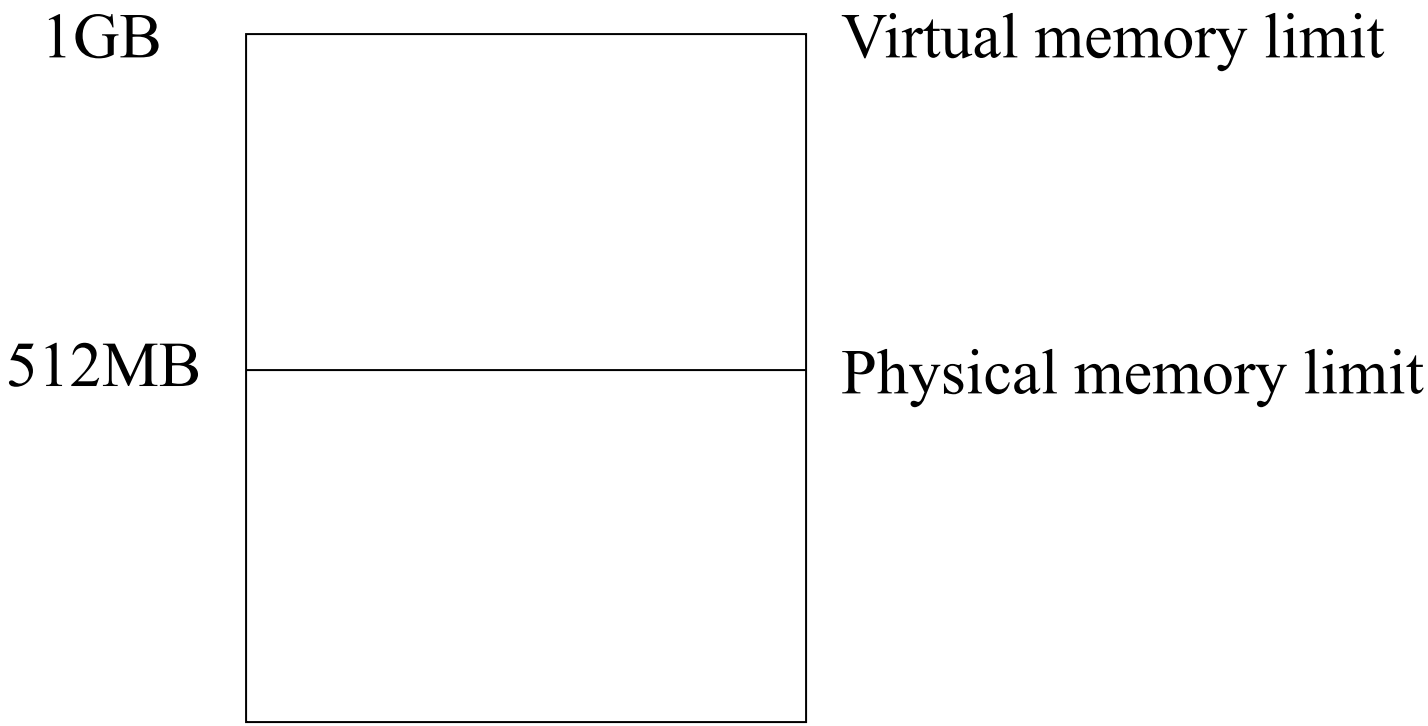

Memory Management

- Virtual memory
  - hard disk space
  - when processor needs more RAM space, swaps unused data onto designated hard disk space
  - improves flexibility but is slower than RAM to which the processor has direct access

Virtual Memory Management

- Main memory is divided into **frames**, often 4KB.
- The executable program is similarly divided into frame-sized chunks known as **pages**.
- When a program is invoked not all the pages are loaded into main memory, only sufficient to get it started. (Which part?)
- The rest are copied into the disk area, known as **swap area**.

Virtual Memory Management (cont.)

- When an instruction is needed from a page not yet in the main memory it is loaded from the disk.
- If no empty frames exist at the moment *the least used frame* is freed to allow the new pages to be loaded.
  - This is called **swapping**.

Virtual memory

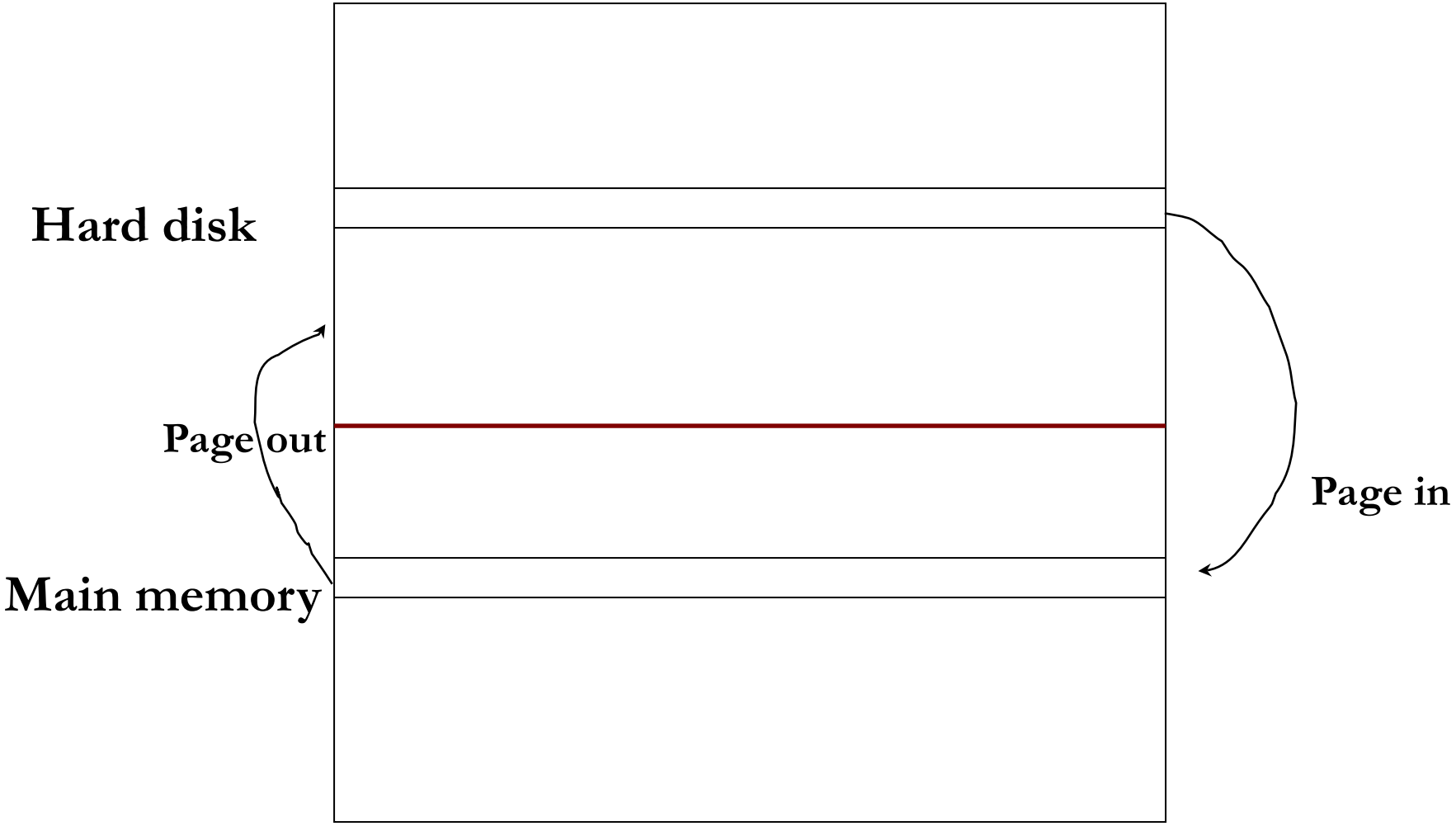

Virtual memory

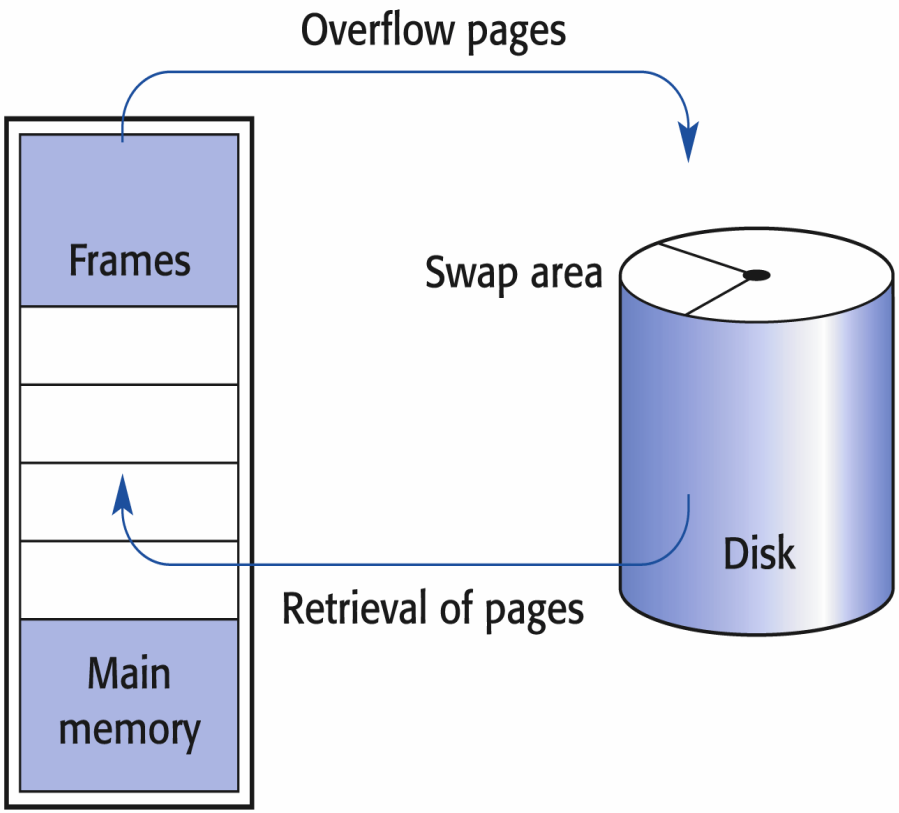

Fig. 12.13 Virtual memory scheme for main memory overflow.

© Pearson Education 2001

Virtual Memory Addressing

- Within an user program addresses are in a form of 32 bit **logical** address.
- In the case of 4KB paging system:
  - The lower 12 bits are ‘address within a page’.
  - The upper 20 bits serve as the ‘page number’.

- **Memory Management Unit** maps logical addresses into references to frame numbers and addresses within the frames.

Virtual Memory Management

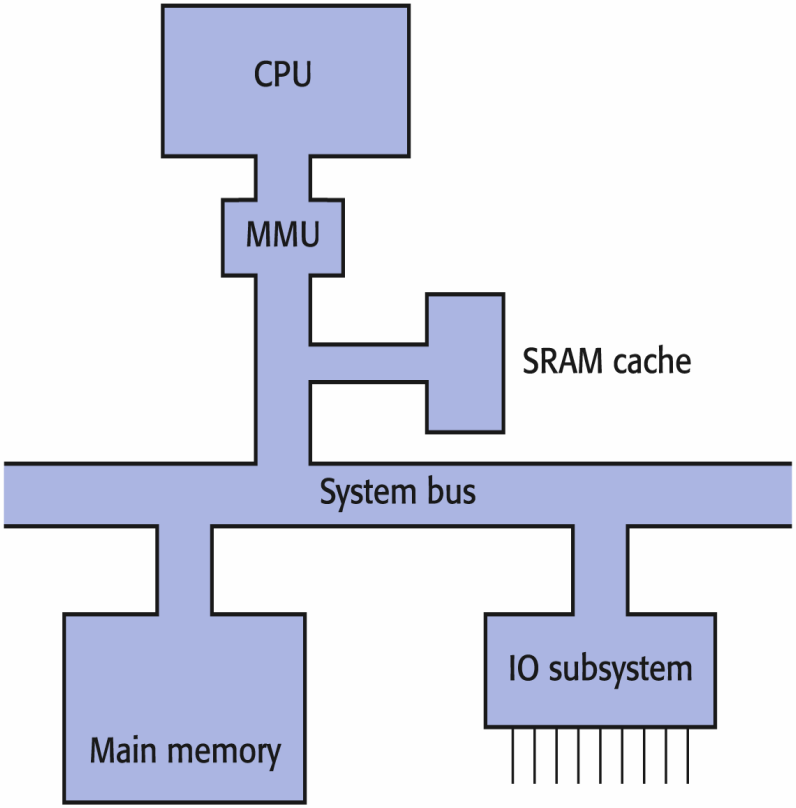

Fig. 12.15 Location of the virtual memory management unit.

© Pearson Education 2001

Q&A

- Q: When you save to this, your data will remain intact even when the computer is turned off.
- a. RAM
- b. motherboard
- c. secondary storage device
- d. primary storage device

Q&A

- Q: This data access method will slow down the process of data retrieval.
- a. direct access storage
- b. sequential storage
- c. random access storage

Q&A

- Q: The closed, concentric rings on a diskette are referred to as
- a. grooves.
- b. tracks.
- c. sectors.
- d. circles.

Q&A

- Q. When you retrieve a file from secondary storage and display it on the screen,
- a. you are actually retrieving a copy of the desired file and putting it on the desktop.
- b. an old version of the file remains in secondary storage.
- c. that file is then sent to ROM.
- d. if no file contents is modified after retrieval, the original file will not be replaced when you finish.

Readings

- [Wil06] section 12.7 for hard disk.
- [Wil06] section 12.5 for virtual memory.